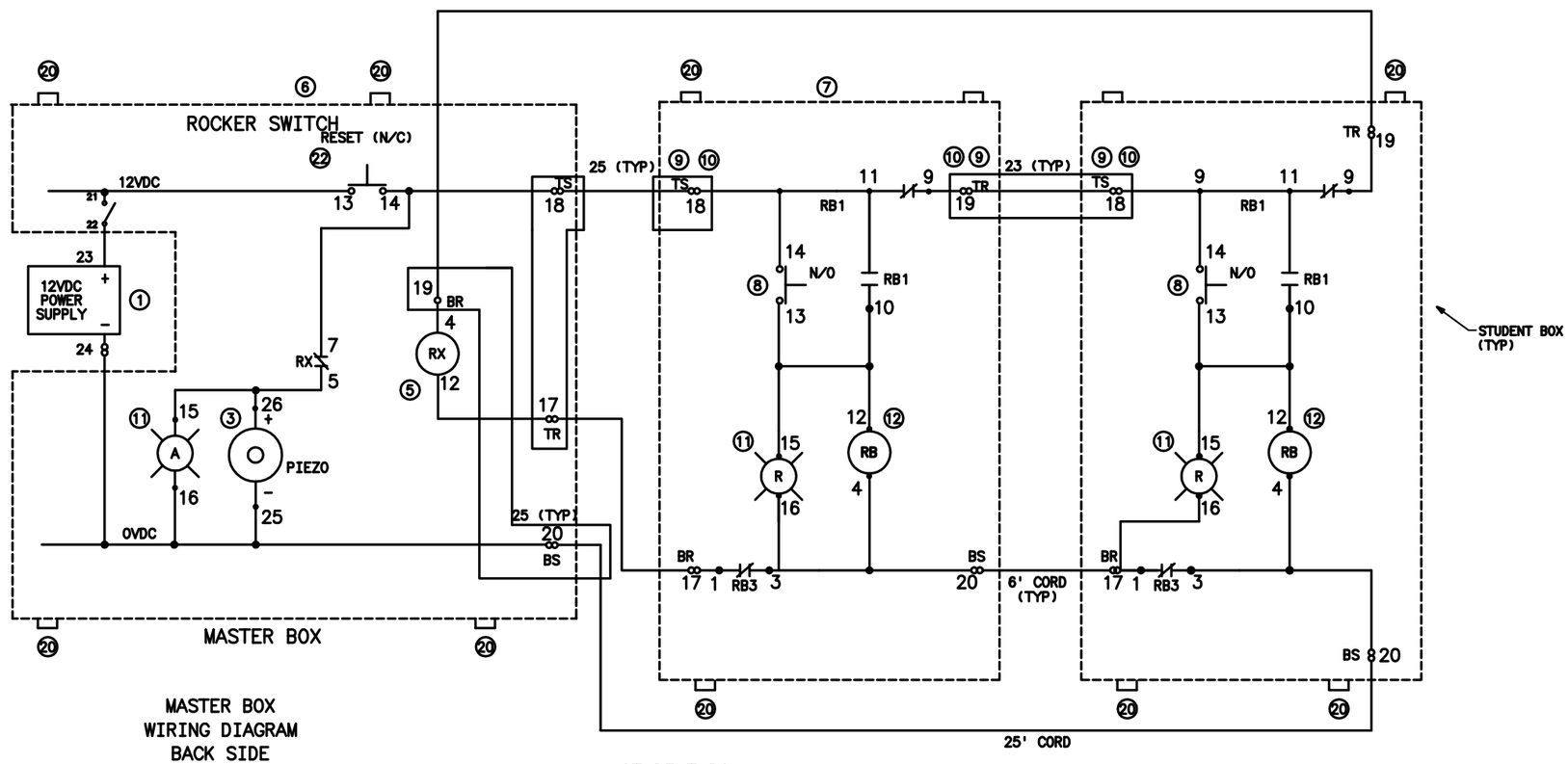

MASTER BOX
WIRING DIAGRAM
BACK SIDE

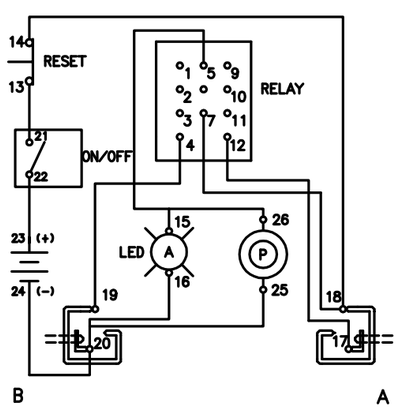

STUDENT BOX
WIRING DIAGRAM
BACK SIDE

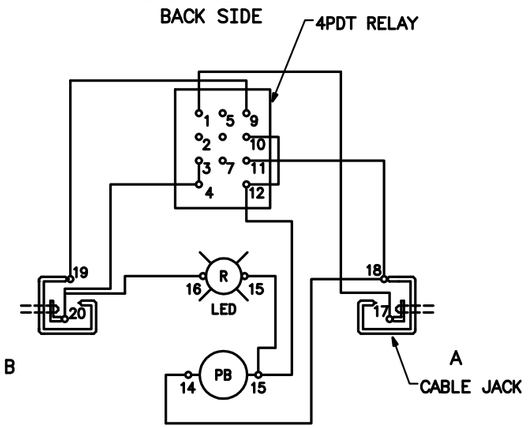

WIRE COLOR CODING
(MASTER BOX)

WIRE	COLOR	
	RED	WHTIE
4–19	X	
5–26	X	
7–18	X	
13–21	X	
14–18	X	
15–26	X	
22–23	X	
12–17		X
16–20		X
20–25		X
24–20		X

WIRE COLOR CODING
(STUDENT BOX)

WIRE	COLOR	
	RED	WHTIE
9–19	X	
10–12	X	
12–13	X	
13–15	X	
14–18	X	
11–18	X	
1–17		X
16–20		X
4–20		X
3–4		X

UNITED STATES DEPARTMENT OF ENERGY
WESTERN AREA POWER ADMINISTRATION

12/7/01
KRISHNA SHAH
916-353-4483